Operating Instructions | Betriebsanleitung | Mode d'emploi | Instrucciones de manejo | Manuale d'uso | Instruções de Operação

Original Operating Instructions | Original-Betriebsanleitung | Mode d'emploi original | Instrucciones de manejo originales | Manuale d'uso originale | Instruções de Operação Originais

Entris® II Essential Line

BCE Model | Modelle BCE | Modèles BCE | Modelos BCE | Modelli BCE | Modelo BCE
Analytical and Precision Balances | Analysen- und Präzisionswaagen | Balances d'analyse et de précision | Balanzas analíticas y de precisión | Bilance analitiche e di precisione | Balanças Analíticas e de Precisão



1000059012

English	page	3
Deutsch	Seite	51
Français	page	99
Español	página	149
Italiano	pagina	197
Português	página	246

Contents

1 About these Instructions 5
1.1 Scope 5
1.2 Other Applicable Documents 5
1.3 Target Groups 5
1.4 Symbols Used 6
1.4.1 Warnings in Operating Instructions 6
1.4.2 Other Symbols 6

2 Safety Instructions 6
2.1 Intended Use 6
2.2 Personnel Qualification 6
2.3 Significance of these Instructions 7
2.4 Proper Working Order of the Device 7
2.5 Symbols on the Device 7
2.6 Electrical Equipment 7
2.6.1 Damage to the Electrical Equipment of the Device 7
2.6.2 Working on the Device's Electrical Equipment 7
2.6.3 Power Supply Unit and Power Supply Cable 7
2.7 Conduct in an Emergency 7
2.8 Accessories and Spare Parts 8
2.9 Personal Protective Equipment 8
2.10 Glass Breakage 8

3 Device Description 9
3.1 Device Overview 9
3.2 Device Connections 9
3.3 Weighing Pan and Associated Components 10
3.4 Conformity-assessed Devices 10
3.5 Symbols on the Device 10

4 Operating Concept 11
4.1 Operating Display in Weighing Mode 11
4.2 Menu and System Settings Display 11
4.2.1 Buttons 12
4.3 Displays in the Operating Display 13
4.4 Menu Structure 15
4.4.1 "Main Menu" Menu Structure 15
4.4.2 "Toggle Between Weight Units" Menu Structure 16
4.5 Navigating the Menus 16

5 Installation 17
5.1 Scope of Delivery 17
5.2 Selecting an Installation Site 17
5.3 Unpacking 17
5.4 Installing the Weighing Pan and Associated Components 17
5.4.1 Installing a Device with Analytical Draft Shield 17
5.4.2 Installing a Device with Round Draft Shield 18
5.5 Acclimatizing the Device 18

6 Getting Started 19
6.1 Installing the Power Supply Unit 19
6.1.1 Assembling the Power Supply Unit 19
6.1.2 Dismantling the Power Plug Adapter 19
6.2 Connecting the Power Supply 19

7 System Settings 20
7.1 Performing System Settings 20
7.2 Setting the Calibration and Adjustment 20
7.2.1 Switching the isoCAL Function On or Off (Only Model I-1x) 20
7.2.2 Setting Internal Calibration and Adjustment (Only Model I-1x) 20
7.2.3 Setting the External Calibration and Adjustment 20
7.3 Parameter List 21
7.3.1 "SETUP"/"BALANCE" Menu 21
7.3.2 "SETUP"/"GEN.SERV." Menu 23
7.3.3 "DEVICE"/"RS232" Menu 23
7.3.4 "DEVICE"/"USB" Menu 24
7.3.5 "DEVICE"/"EXTRAS" Menu 25
7.3.6 "DATA.OUT."/"COM. SBI" Menu 26
7.3.7 "DATA.OUT."/"PRNT.PAR." Menu 26
7.3.8 "DATA.OUT."/"PC.DIREC." Menu 27
7.3.9 "APPLIC."/"WEIGH" Menu 27
7.3.10 "APPLIC."/"COUNT" Menu 28
7.3.11 "APPLIC."/"PERCENT" Menu 28
7.3.12 "APPLIC."/"NET.TOT." Menu 28
7.3.13 "APPLIC."/"TOTAL" Menu 28
7.3.14 "APPLIC."/"ANIM.WG" Menu 29
7.3.15 "APPLIC."/"CALC." Menu 29
7.3.16 "APPLIC."/"DENSITY" Menu 29
7.3.17 "APPLIC."/"STATIST." Menu 30
7.3.18 "APPLIC."/"PEAK.HLD." Menu 30
7.3.19 "APPLIC."/"CHECK.WG." Menu 30
7.3.20 "INPUT" Menu 31
7.3.21 "INFO" Menu 32
7.3.22 "LANGUAG." Menu 32

8 Operation 32
- 8.1 Switching the Device On and Off 32
- 8.2 Waiting for the Warm-up Time 32
- 8.3 Leveling the Device with a Level 33
- 8.4 Overview of Calibration and Adjustment ... 33
- 8.5 Calibrating and Adjusting Device with isoCAL Function (Only Model I-1x) 33
- 8.6 Calibrating and Adjusting the Device Internally (Only Model I-1x) 34
- 8.7 Externally Calibrating and Adjusting the Device 34
- 8.8 Printing Results of the Calibration and Adjustment Process 34
- 8.9 Weighing 35
- 8.10 Setting or Changing an Application 35
- 8.11 Running Applications (Examples) 35
  - 8.11.1 Executing the “Toggle Between Weight Units” Function 35
  - 8.11.2 Selecting Convertible Units and their Decimal Places 35
  - 8.11.3 Running the “Statistics” Application 35
- 8.12 Printing Weighing Result with ID Marking .. 36

9 Cleaning and Maintenance 36
- 9.1 Detaching the Draft Shield 36
  - 9.1.1 Detaching the Analytical Draft Shield, Weighing Pan, and Associated Components 36
  - 9.1.2 Dismantle the Round Draft Shield, Weighing Pan, and Associated Components 37
- 9.2 Cleaning the Device 37
- 9.3 Installing the Draft Shield 37
  - 9.3.1 Installing the Analytical Draft Shield 37
  - 9.3.2 Installing the Round Draft Shield .. 37
- 9.4 Maintenance Schedule 37
- 9.5 Software Update 37

10 Malfunctions 38
- 10.1 Warning Messages 38
- 10.2 Troubleshooting 40

11 Decommissioning 41
- 11.1 Decommissioning the Device 41

12 Transport 41
- 12.1 Transporting the Device 41

13 Storage and Shipping 41
- 13.1 Storage 41
- 13.2 Returning the Device and Parts 41

14 Disposal 41
- 14.1 Information on Decontamination 41
- 14.2 Disposing of the Device and Parts 42
  - 14.2.1 Information on Disposal 42
  - 14.2.2 Disposal 42

15 Technical Data 42
- 15.1 Ambient Conditions 42
- 15.2 Contamination Type, Overvoltage Category (Device) 43
- 15.3 Power Supply 43
  - 15.3.1 Power Supply Device 43
  - 15.3.2 Power Supply Unit 43
- 15.4 Electromagnetic Compatibility 44
- 15.5 Backup Battery 44
- 15.6 Materials 44
- 15.7 Warm-up Time 44
- 15.8 Interfaces 45
  - 15.8.1 Specifications of the RS232 Interface 45
  - 15.8.2 Specifications for the USB-C Interface 45
- 15.9 Device Dimensions 46
- 15.10 Metrological Data 47
  - 15.10.1 BCE224 | BCE124 | BCE64 | BCE653 | BCE623 | BCE423 | BCE323 | BCE223 models 47

16 Accessories 49
- 16.1 Balance Accessories 49
- 16.2 Printer and Accessories for Data Communication 49
- 16.3 External Calibration and Adjustment Weights 50

17 Sartorius Service 50

18 Conformity Documents 50

1 About these Instructions

1.1 Scope

These instructions are part of the device. These instructions apply to the device in the following versions:

Device	Model [1) 2)]
Entris® BCE analytical balance with manual analytical draft shield, readability of 0.1 mg	BCE224I-1x | BCE224-1x | BCE124I-1x | BCE124-1x | BCE64I-1x | BCE64-1x
Entris® BCE precision balance with manual analytical draft shield, readability of 1 mg	BCE623I-1x | BCE623-1x | BCE423I-1x | BCE423-1x | BCE323I-1x | BCE323-1x | BCE223I-1x | BCE223-1x
Entris® BCE precision balance with round glass draft shield, readability of 1 mg	BCE653I-1x | BCE653-1x

1) Country-specific marking in model, x =	
S	Standard balances without country-specific additions
SAR	Standard balances with country-specific additions for Argentina
SJP	Standard balances with country-specific additions for Japan
SKR	Standard balances with country-specific additions for South Korea
OBR	Balances with approval for Brazil
OIN	Balances with approval for India
OJP	Balances with approval for Japan
ORU	Balances with approval for Russia
CCN	Balances with approval for China
CEU	Conformity-assessed balances with EU type examination certificate without country-specific additions
CFR	Conformity-assessed balances with EU type examination certificate only for France
NUS	Balances with approval for USA and Canada

2) Model-typical marking in model	
I-1x	Devices with internal calibration and adjustment function

1.2 Other Applicable Documents

In addition to these instructions, observe the following documentation:

– Installation instructions for the accessories, e.g. printer

1.3 Target Groups

These instructions are addressed to the following target groups. The target groups must possess the specified knowledge.

Target group	Knowledge and qualifications
User	The user is familiar with the operation of the device and the associated work processes. They understand the hazards which may arise when working with the device and know how to prevent them. They have been trained in the operation of the device.

Target group	Knowledge and qualifications
Operator	The operator of the device is responsible for ensuring compliance with workplace health and safety regulations. The operator must ensure that all persons who work with the device have access to the relevant information and are trained in working with the device.

1.4 Symbols Used

1.4.1 Warnings in Operating Instructions

⚠ WARNING
Denotes a danger with the risk that death or severe injury may result if it is **not** avoided.

⚠ CAUTION
Denotes a hazard that may result in moderate or minor injury if it is **not** avoided.

NOTICE
Denotes a danger with the risk that property damage may result if it is **not** avoided.

1.4.2 Other Symbols

▶	Required action: Describes actions which must be carried out.
▷	Result: Describes the result of the actions carried out.
[ ]	Text inside brackets refers to control and display items.
[ ]	Text inside brackets indicates status, warning, and error messages.
M	Indicates information for legal metrology for conformity-assessed (verified) devices. Conformity-assessed devices are also referred to as “verified” in these instructions.

Figures on the Operating Display

The figures on the operating display of the device may deviate from those in these instructions.

2 Safety Instructions

2.1 Intended Use

The device is a high-resolution balance, which can be used indoors, e.g. in industrial areas. The device was developed for the accurate determination of the mass of materials in liquid, paste, powder, or solid form.

Appropriate containers must be used for loading each type of material.

The device is exclusively designed for use according to these instructions. Any further use beyond this is considered **improper**.

If the device is **not** used properly: the protective systems of the device may be impaired. This can lead to unforeseeable personal injury or property damage.

Operating Conditions for the Device

Do **not** use the device in potentially explosive environments. The device may only be used indoors.

The device may only be used with the equipment and under the operating conditions described in the Technical Data section of these instructions.

Modifications to the Device

You may **not** modify or repair the device or make any technical changes. Any retrofitting or technical changes to the device are only permitted with prior written permission from Sartorius.

2.2 Personnel Qualification

If people who do **not** have sufficient knowledge on the safe handling of the device carry out work on the device: Those people may injure themselves or other people nearby.

- ▶ Ensure that all individuals working on the device possess the necessary knowledge and qualifications (description see ChapterKapitel „1.3 Target Groups“, Seite 5).
- ▶ If a particular qualification is indicated for the actions described: Have these activities carried out by the required target group.
- ▶ If **no** particular qualification is indicated for the actions described: Have these activities carried out by the “user” target group.

2.3 Significance of these Instructions

Failure to follow the instructions in this manual can have serious consequences, e.g. exposure of individuals to electrical, mechanical, or chemical hazards.

- ▶ Before working with the device: Read the instructions carefully and completely.
- ▶ If these instructions are lost, request a replacement or download the latest version from the Sartorius website (www.sartorius.com).
- ▶ Ensure that the information contained in these instructions is available to all individuals working on the device.

2.4 Proper Working Order of the Device

A damaged device or worn parts may lead to malfunctions or cause hazards which are difficult to recognize.

- ▶ Only operate the device when it is safe and in perfect working order.
- ▶ In the event of damage to the housing, disconnect the device from the power supply and prevent it from being restarted.
- ▶ Do not open the device housing. Have any malfunctions or damage repaired immediately by Sartorius Service.
- ▶ Comply with the maintenance intervals (for intervals and maintenance work, see Kapitel „9.2 Cleaning the Device“, Seite 37).

2.5 Symbols on the Device

All symbols appearing on the device, such as warnings and safety labels, must be legible.

- ▶ Do **not** conceal, remove, or modify the symbols.
- ▶ Replace the symbols if they become illegible.

2.6 Electrical Equipment

2.6.1 Damage to the Electrical Equipment of the Device

Damage to the device's electrical equipment, e.g. damaged insulation, can be life-threatening. There is a danger to life from contact with live parts.

- ▶ If the electrical equipment of the device is defective, cut off the power supply and contact Sartorius Service.
- ▶ Keep live parts away from moisture. Moisture can cause short circuits.

2.6.2 Working on the Device's Electrical Equipment

Only Sartorius Service personnel may work on or modify the electrical equipment of the device. The device may only be opened by Sartorius Service personnel.

2.6.3 Power Supply Unit and Power Supply Cable

Serious injury can result, e.g. from electric shocks, if an unsuitable | inadequately dimensioned power cord or unsuitable power supply unit is used.

- ▶ Only use the original power supply unit and original power supply cable.
- ▶ If the power supply unit or power supply cable must be replaced: Contact Sartorius Service. Do **not** repair or modify the power supply unit or power cable.

2.7 Conduct in an Emergency

If there is immediate danger of personal injury or equipment damage, e.g., due to malfunctions or dangerous situations, the device must be immediately taken out of operation.

- ▶ Disconnect the device from the power supply.
- ▶ Malfunctions should be remedied by Sartorius Service.

2.8 Accessories and Spare Parts

The use of unsuitable accessories and spare parts can affect the functionality and safety of the device and have the following consequences:

- Risk of injury to persons
- Damage to the device
- Device malfunctions
- Device failure

- ▶ Only use approved accessories and spare parts supplied by Sartorius.
- ▶ Only use accessories and spare parts that are in proper working order.

2.9 Personal Protective Equipment

Personal protective equipment protects against risks arising from the material being processed.

- ▶ If the workplace or the process in which the device is being used requires personal protective equipment: Wear personal protective equipment.

2.10 Glass Breakage

Glass components can break if they fall or are handled incorrectly. Glass fragments can cause cuts.

- ▶ Only lift the device by its base, **not** by the draft shield.
- ▶ When lifting and transporting, ensure that **no** personnel or objects are in the way.
- ▶ Only operate the operating display with your fingers. Do **not** use pointed or sharp objects.

3 Device Description

3.1 Device Overview

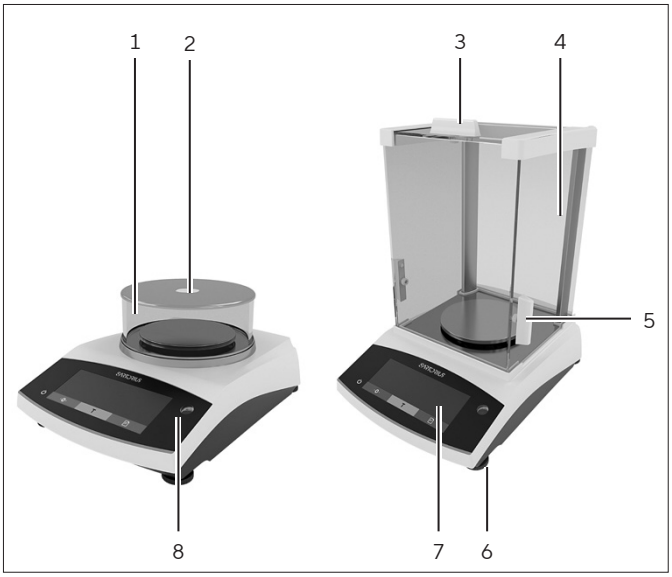

Fig. 1: Precision balance with round draft shield and analytical balance with analytical draft shield (example)

Pos.	Designation	Description
1	Round draft shield	
2	Cover of the round draft shield	
3	Upper draft shield panel	Used to manually open the upper panel
4	Analytical draft shield	
5	Side draft shield panel	Used to manually open the side panel
6	Leveling foot	Used to level the balance, manually adjustable
7	Control module	
8	Level	

3.2 Device Connections

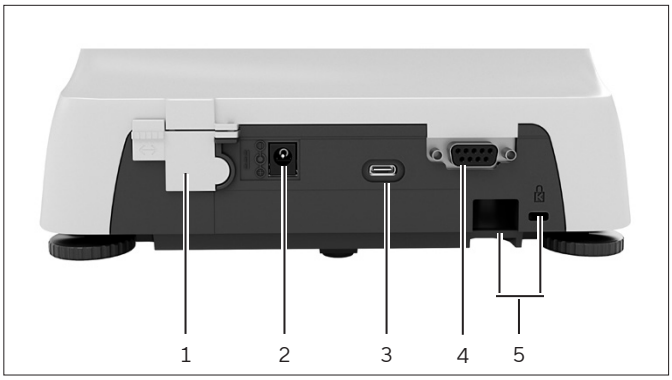

Fig. 2: Precision balance with round draft shield (rear view)

Pos.	Designation	Description
1	Access switch	Protects the device from changes to the device settings. Is sealed for conformity-assessed devices
2	Power supply	Connection for power supply to the device
3	USB-C connection	For connection to a printer, PC, or a second display
4	RS232 connection	9-pin, for connection to a printer, PC, or a second display
5	Slot	For attaching an anti-theft device or a Kensington lock

3.3 Weighing Pan and Associated Components

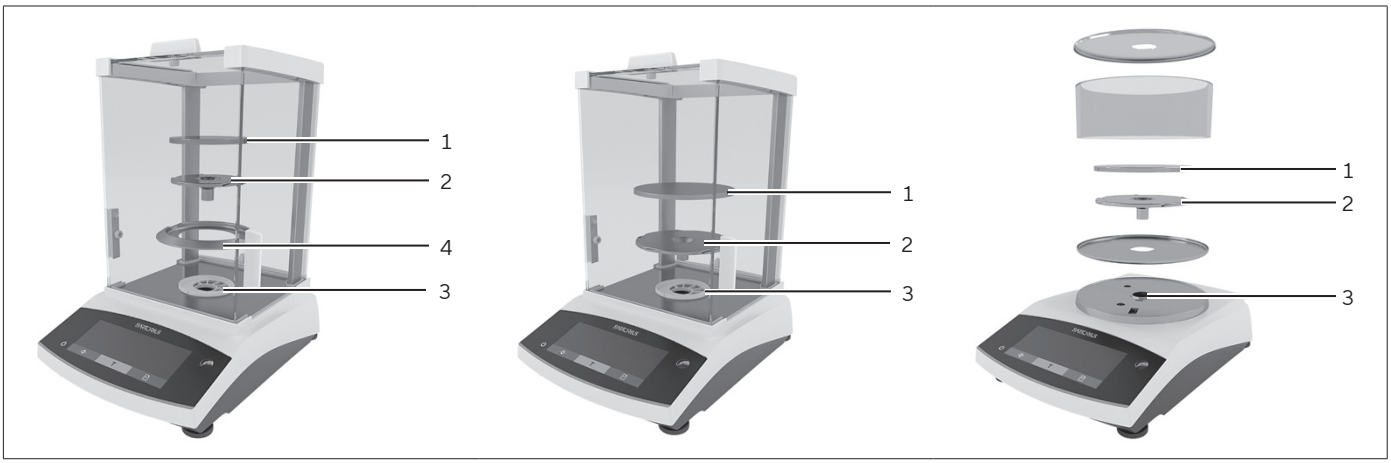

Fig. 3: Analytical balance with analytical draft shield, precision balance with analytical draft shield, and precision balance with round draft shield (example)

Pos.	Designation	Description
1	Weighing pan	
2	Pan support	
3	Pan retainer	
4	Shield disk	Optional accessory, only for analytical balances

3.4 Conformity-assessed Devices

Some settings of conformity-assessed models are protected against user changes, e.g. external calibration for devices in accuracy class II. This measure is intended to ensure the suitability of the devices for use in legal metrology.

3.5 Symbols on the Device

Symbol	Meaning
	NOTICE! Read the operating instructions.

4 Operating Concept

4.1 Operating Display in Weighing Mode

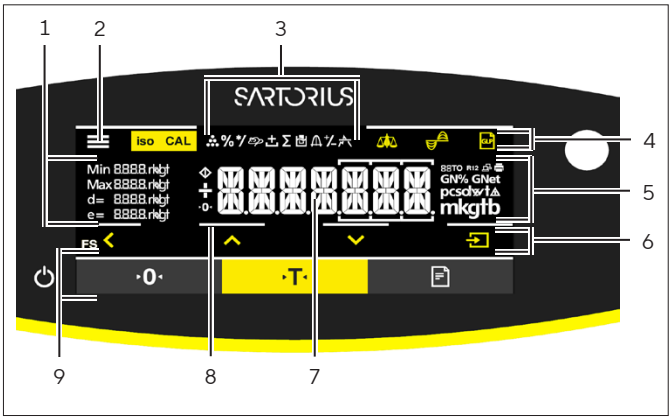

Fig. 4: Operating display in weighing mode (example)

Pos.	Designation	Description
1	Metrological data	
2	Menu	
3	Application overview	Displays the selected application program during operation
4	Toolbar	
5	Weighing unit	Displays the selected unit, e.g. grams, [g]
6	Navigation bar	For navigation in the menu and system settings
7	Measurement display	
8	Visual touch feedback	
9	Toolbar	

4.2 Menu and System Settings Display

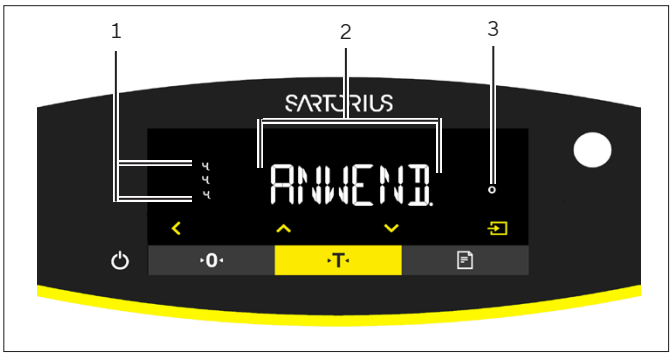

Fig. 5: Menu and System Settings Display (example)

Pos.	Designation	Description
1	[Selection] display	
2	Menu level	Shows the position of the displayed menu or parameter in up to 4 levels
3	Menu or parameter entry	

4.2.1 Buttons

Symbol	Designation	Description
	[On/Off] button	– When the button is pressed: Switches the operating display on. – If the button is held down: Switches the operating display off.
	[Menu] button	– When the button is pressed: The settings menu opens. – If the button is held down: It switches to version display.
	[Zero] button	Zeroes the device.
	[Tare] button	Starts taring.
	[Print] button	Exports the readouts to the integrated data interfaces.
	[isoCAL] button	If the button is flashing: Starts the isoCAL function. If the button is not flashing: Starts the set calibration and adjustment function.
	[Adjust] button	Starts the set calibration and adjustment function.
	[GLP] button	– Exits the GLP printout and starts printing the GLP footer. – If the “Net-total”, “Totalizing”, or “Statistics” application is active: Prints and deletes the saved values and exits the application.
	[Ambient condition] button	Switches between the ambient conditions “V.STABLE”, “STABLE”, UNSTABL.” and “V.UNSTBL.”.
	[Application filter] button	Switches between the “weighing” and “filling” application filters.
	[Toggle between weight units] button	If the “Toggle between weight units” function is active: – If the button is held down: Accesses the “Toggle between weight units” function menu. – When the button is pressed: Switches between the basic unit display and up to 4 other units.

	[Back] button	– In the menu:
		  – When the button is pressed: Returns to the previous display.
		  – If the button is held down: Saves the menu settings.
		– When entering digits: Selects the previous digit position.
		– For an active application: Exits the application and deletes the set reference value.

	[Up] button	– In the menu: Scrolls through the menu levels or the available parameters. – When entering digits: Increases the displayed value. – In the main display of an active application: Switches to the display of the current weight value | parameter.

Symbol	Designation	Description
	[Down] button	– In the menu: Scrolls through the menu levels or the available parameters. – When entering digits: Decreases the displayed value. – In the main display of an application that is **not** active: Accesses the display to set the reference values. – In the main display of an active application: Switches to the display of the current weight value | parameter.

Symbol	Designation	Description
	[Confirm] button	– In the menu: Accesses the displayed menu level or confirms the displayed parameter. – When entering digits: Selects the next digit position. – In the main display of an application that is **not** active: Starts the application process and saves the set reference value. – In the main display of an active application: Adopts the next component or the next parameter.

4.3 Displays in the Operating Display

Symbol	Designation	Description
	[Counting] display	Indicates that the “Counting” application is selected.
	[Weighing in percent] display	Indicates that the “Weighing in percent” application is selected.
	[Calculation] display	Indicates that the “Calculation” application is selected.
	[Animal weighing] display	Indicates that the “Animal weighing” application is selected.
	[Net-total] display	Indicates that the “Net-total” application is selected.
	[Totalizing] display	Indicates that the “Totalizing” application is selected.
	[Density determination] display	Indicates that the “Density determination” application is selected.
	[Statistics] display	Indicates that the “Statistics” application is selected.
	[Peak hold] display	Indicates that the “Peak hold” application is selected.
	[Checkweighing] display	Indicates that the “Checkweighing” application is selected.
	[Busy] display	Indicates that the device is processing a command.

Symbol	Designation	Description
	[Sign] display	Indicates whether the value being displayed is positive or negative.
	[Zero] display	For some conformity-assessed devices: Indicates that the device has been zeroed.
	[AUTO] display	Indicates that the “Animal weighing” application starts automatically.
	[Application help] display	— Indicates the number of components for “Totalizing”, “Net total”, and “Statistics”. — Indicates the minimum limit “LL” and the maximum limit “HH” during “Checkweighing”.
	[R12] display	Indicates the active range for multi-range balances.
	[Printer] display	— Indicates that a printer has been detected at the USB port. — Flashes if the data output is active.
	[PC-Connect] display	— Indicates that a PC or a second display has been detected at the USB port. — Flashes if the data connection is active.
	[Percent] display	Indicates that a percentage value is being displayed.
	[Net] display	Indicates that a net value is being displayed.
	[Gross] display	Indicates that a gross value is being displayed.
	[Selection] display	In the menu: Identifies the selected parameter. If the “Calculation” or “Density determination” application is active: Indicates that a calculated value is being displayed.
	[Unit symbol] display	Indicates the set weight unit, e.g. [g] for “grams”.
	[Quantity]	Indicates that a quantity is being displayed.
	[**Invalid** weight value] display	— Indicates that the display does **not** contain a weight value, but is instead the calculated result of an application, e.g. for the “Totalizing” application. — For conformity-assessed devices: Indicates a fault. The cause of this fault is displayed after pressing the [Change] key.

4.4 Menu Structure

4.4.1 “Main Menu” Menu Structure

▶ Navigating in menus (see Kapitel 4.5, Seite 16).

Level 1	Level 2	Description
SETUP	BALANCE	Set the functions of the device.
	GEN.SERV. “General services”	Reset the menu to factory settings.
DEVICE	RS-232 “RS232, 9-pin”	Define the parameters for the COM interface.
	USB “USB-C”	Define the parameters for the USB interface.
	EXTRAS	Define the functions of the operating display.
DATA.OUT. “Data output”	COM. SBI “SBI communication”	Configure the automatic data output.
	PRNT.PAR. “Printout settings”	Perform the settings for the printout.
	PC.DIREC. “Direct transfer of data (PC)”	Define the output format for the data exchange between the balance and the PC.
APPLIC. “Applications”	WEIGH	– Determine the weight value of a sample. – Activate the functions for all applications.
	COUNT	Determine the number of parts that have approximately equal weight.
	PERCENT “Weighing in percent”	Determine the percentage share of a sample based on a reference weight.
	NET.TOT. “Net-total”	Carry out the weighing of components for a mixture.
	TOTAL “Totalizing”	Add weights of independent weighing processes in a memory.
	ANIMALW. “Animal weighing”	Weigh unstable samples, e.g. animals. This program calculates the average of several measurement cycles.
	CALC. “Calculation”	Calculate the weight using a multiplier or divisor, e.g. for determining the weight per unit area of paper.
	DENSITY “Density determination”	Determine the density of solid samples based on the buoyancy method.
	STATIST. “Statistics”	Save and statistically analyze weights and calculated values.
	CHECK.WG. “Checkweighing”	Check whether a weight value falls within the specified tolerances.
	PEAK.HLD. “Peak Hold”	Determine the maximum weight value of a sample (peak value).

Level 1	Level 2	Description
INPUT	DEV.ID.	Save the entered ID number for the device.
	LOT ID	Activate or deactivate the printout of a line for the LOT ID in the GLP printout. It is possible to enter a LOT ID number or the LOT ID can be manually entered in the line.
	SPL. ID	— Activate or deactivate the printout of a line for the SPL. ID in the GLP printout. — The entered ID number can be counted up or down with each sample.
	DATE	Set the date.
	TIME	Set the time.
	USER.PW	Set the user password.
	SERV.PW	Activate the service mode.
	CAL. WT. “Calibration weight”	Define the user-defined weight value for the calibration and adjustment weight.
	INTERV.	The SBI output rate can be set from 0 - 9999 seconds.
INFO “Device information”	VERSION “Version number”	Display the software version number.
	SER. NO. “Serial number”	Display the device’s serial number.
	MODEL	Display the device’s model ID.
	BAC VER.	Display the version of the BAC processor.
LANGUAGE		Set the menu language of the operating display.

4.4.2 “Toggle Between Weight Units” Menu Structure

▶ Navigating in menus (see Kapitel 4.5, Seite 16).

Level 1	Description
Unit 1 - unit 4	Define the displayed weight unit and the resolution for the 1st to 4th convertible unit.

4.5 Navigating the Menus

Procedure



▶ To open the main menu: Press the [Menu] button.

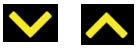

▶ To display menu items or parameters of a level: Press the [Up] or [Down] button.



▶ To return to the next higher menu level or exit the menu: Press the [Back] button.



▶ To open a displayed menu level or a displayed parameter: Press the [Confirm] button.

5 Installation

5.1 Scope of Delivery

Item	Quantity
Device	1
Weighing pan	1
Pan support	1
Power supply unit with country-specific adapters	1
Draft shield	1
For models with analytical draft shield: Dust cover	1
Operating instructions	1

5.2 Selecting an Installation Site

Procedure

▶ Ensure that the following conditions are met at the installation site:

Condition	Characteristics
Ambient conditions	– Suitability tested (for ambient conditions, see Chapter 15.7, page 44)
Setup surface	– Stable, even surface with little vibration – Sufficient space for the device (for space requirements, see Kapitel „15.9 Device Dimensions“, Seite 46) – Sufficient load bearing capacity for the device (for device weight, see Chapter 15.10, page 47)
Access to parts relevant to operation	Convenient and safe

5.3 Unpacking

Procedure

▶ Unpack the device.
▶ ⚠ **CAUTION** Glass breakage due to the incorrect handling of the device! Do **not** lift the device by the draft shield. Only lift the device by its base.
▶ Install the device at the intended installation site.
▶ If the device is stored temporarily: Observe the storage information (see Chapter 13.1, page 41).
▶ Keep all parts of the original packaging, e.g. to return the device.

5.4 Installing the Weighing Pan and Associated Components

5.4.1 Installing a Device with Analytical Draft Shield

Procedure



▶ Fully open the side panel of the analytical draft shield.
▶ Fit the pan support on the pan retainer and place the weighing pan on top.

5.4.2 Installing a Device with Round Draft Shield

Procedure



- ▶ Place the base of the draft shield into the round recess on the device.
- ▶ Fit the pan support on the pan retainer.
- ▶ Place the weighing pan onto the pan support.

- ▶ Place the round glass ring on the base of the draft shield.
- ▶ Place the cover of the draft shield onto the round glass ring.

5.5 Acclimatizing the Device

When a cold device is brought into a warm environment: The temperature difference can lead to condensation from humidity in the device (moisture formation). Moisture in the device can lead to malfunctions.

Procedure

- ▶ Allow the device to acclimatize for approx. 2 hours at the installation site. Ensure that the device is disconnected from the power supply during that time.

6 Getting Started

6.1 Installing the Power Supply Unit

6.1.1 Assembling the Power Supply Unit

Item number on packaging	Power supply unit YEPS01-15VOW with connection cable and country-specific power plug adapters (packed in PE bag with printed country identification, e.g. EU)
YEPS01-PS8	USA and Japan (US+JP), Europe and Russia (EU+RU), Great Britain (UK), India (IN), South Africa (ZA), Australia (AU), China (CN)
YEPS01-PS9	Argentina (AR), Brazil (BR), Korea (KR)
YEPS01-PS10	China (CN)

Procedure

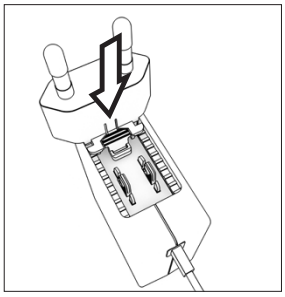

- ▶ Select the country-specific power plug adapter. The power plug adapter must be suitable for use with the wall outlet at the installation site.
- ▶ Insert the power plug adapter into the power supply unit. The grooved button must be facing upwards.
- ▶ Push the power plug adapter as far as you can until it clicks into place.
- ▶ Check whether the power plug adapter is securely locked in place by pulling it gently.
- ▷ If the power plug adapter does **not** move: It is locked in place.

6.1.2 Dismantling the Power Plug Adapter

Procedure

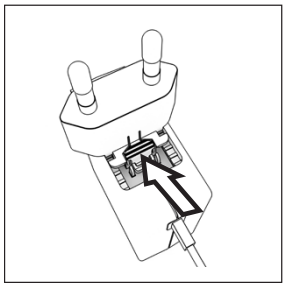

- ▶ Press the grooved button from above and pull back on the power plug adapter.
- ▶ Push the power plug adapter out of the power supply unit and remove it.

6.2 Connecting the Power Supply

Procedure

- ▶ ⚠ **WARNING** Severe injuries caused by using defective power supply cables! Check the power supply cable for damage, e.g. cracks in the insulation.
  - ▶ If required: Contact Sartorius Service.
- ▶ Check whether the country-specific power plug matches the power connections at the installation site.
  - ▶ If required: Replace the country-specific power plug adapter.
- ▶ **NOTICE** Damage to the device due to excessive input voltage! Check whether the voltage specifications on the manufacturer's ID label match those of the power supply at the installation site.
  - ▶ If the input voltage is too high: Do **not** connect the device to the power supply.
  - ▶ Contact Sartorius Service.
- ▶ Connect the right angle plug to the "Power Supply" connection.
- ▶ Connect the mains plug to the wall outlet (mains voltage) at the installation site.
- ▷ The [BOOTING] display appears in the operating display.
- ▷ The device performs a self-test.

7 System Settings

7.1 Performing System Settings

Default settings can be adjusted for the device and the applications in order to align with the ambient conditions and individual operating requirements.

The following settings are necessary to operate the device together with connected components:

– Set up the communication of the connected devices
– Set up additional components

The following settings are recommended to set up the device:

– Set the menu language
– Set the date and time
– Set the calibration and adjustment

Procedure

▶ Press the [Menu] button.
▶ To adjust settings: Open the desired menu.
▶ Select and confirm the desired parameter (parameters, see Chapter "7.3 Parameter List", page 21).
▶ Exit the menu.

7.2 Setting the Calibration and Adjustment

7.2.1 Switching the isoCAL Function On or Off (Only Model I-1x)

When using the isoCAL function, the device performs an automatic time- and temperature-dependent internal calibration and adjustment.

M If this relates to a conformity-assessed device in legal metrology: In some cases it is not possible to switch off the isoCAL function.

Procedure

▶ Open the "SETUP" / "BALANCE" menu.
▶ To set the automatic start of the isoCAL function: Select the "ON" calibration value for the "ISOCAL" parameter.
▶ To set the manual start of the isoCAL function: Select the "Note" calibration value for the "ISOCAL" parameter.
▶ To switch off the isoCAL function: Select the "OFF" calibration value for the "ISOCAL" parameter.

7.2.2 Setting Internal Calibration and Adjustment (Only Model I-1x)

The following functions can be set for the internal calibration and adjustment:

– Internal calibration with automatic start of the adjustment.
– Internal calibration with manual start of the adjustment.

Procedure

▶ Open the "SETUP" / "BALANCE" menu. Call up the "CAL.JUST." parameter and select the value "CAL. INT.".
▶ If the calibration function needs to be set with subsequent automatic adjustment: In the "SETUP" / "BALANCE" menu, for the "CAL.SEQ." parameter, select the "ADJUST" setting value.
▶ If the calibration function needs to be set without subsequent automatic adjustment: In the "SETUP" / "BALANCE" menu, for the "CAL.SEQ." parameter, select the "CAL./ADJ." setting value.

7.2.3 Setting the External Calibration and Adjustment

The following functions can be set for the external calibration and adjustment:

– External calibration with manual start of the adjustment.

M If this relates to a conformity-assessed device in legal metrology: External calibration and adjustment is **not** possible.

Procedure

- ▶ Open the “SETUP” / ”BALANCE” menu.
- ▶ If the calibration function needs to be set with subsequent automatic adjustment: Select the “ADJUST” calibration value for the “CAL.SEQ.” parameter.
- ▶ If the calibration function needs to be set without subsequent automatic adjustment: Select the “CAL-ADJUST” calibration value for the “CAL.SEQ.” parameter.

Setting the Weight Value for the External Weight

A preset weight value or a user-defined weight value can be set for the external weight.

Procedure

- ▶ If the preset weight value needs to be used: In the “SETUP” / ”BALANCE” menu, for the “CAL./ADJ.” parameter, select the “EXT.CAL.” setting value.
- ▶ If a user-defined weight value needs to be set:
  - ▶ In the “INPUT” menu, select the “CAL.WT.” setting value.
  - ▶ Enter the desired weight value and press the [Confirm] button.
  - ▶ To use the user-defined weight value for the next calibration: In the “SETUP” / ”BALANCE” menu, for the “CAL./ADJ.” parameter, select the “E.CAL. USR” setting value.

7.3 Parameter List

7.3.1 “SETUP” / ”BALANCE” Menu

Parameter	Setting values	Explanation
AMBIENT	V.STABLE	Sets the ambient conditions to “very stable”: Activates a fast change in the weight values in the event of a load change with a high output rate. Recommended for the following work environment: — Very stable table near the wall — Closed and calm room
	STABLE*	Sets the ambient conditions to “stable”. Recommended for the following work environment: — Stable table — Slight movement in the room — Slight draft
	UNSTABL.	Sets the ambient conditions to “unstable”: Activates the delayed change in weight values with a reduced output rate. Recommended for the following work environment: — Simple office desk — Room with moving machinery or personnel — Slight air movement
	V.UNSTBL.	Sets the ambient conditions to “very unstable”: Activates a significantly delayed change in the weight values and long wait for stability with a further reduction in the output rate. Recommended for the following work environment: — Noticeable and slow floor vibrations — Noticeable building vibrations — Weighed goods moved — Very strong air movements

* Factory setting

Parameter	Setting values	Explanation
APP.FILT.	FINAL.RD.*	Activates a filter that enables a fast change in the display for very fast load changes. Display changes with minimal load changes (in the digit range) occur more slowly.
	FILLING	Activates a filter that enables a very fast change in the display with minimal load changes, e.g. when filling containers.
STAB.RNG	V. ACC.	Sets the stability to "very accurate".
	ACC.*	Sets the stability to "accurate".
	FAST	Sets the stability to "fast".
	V. FAST	Sets the stability to "very fast".
ZER./TAR.	W/O STB.	If the button is pressed: The function of the [Zero] or [Tare] button is executed immediately.
	W/ STAB.*	The function of the [Zero] or [Tare] button is only executed after stability is achieved.
AUTOZER.	ON*	Activates automatic zeroing. The display is automatically set to zero in case of a deviation of 0 less than (X).
	OFF	Deactivates automatic zeroing. Zeroing must be triggered with the [Zero] button.
WT.UNIT	GRAMS*, KILOGR., CARATS, POUNDS, OUNCES, TROY.OZ., HKTAEL, SNGTAEL, TWNTAEL, GRAINS, PENNYWT., MILLIGR., PTS./LB, CHNTAEL., MOMMES, AUSTR.CT, TOLA, BAHT, MESGHAL, NEWTON	— The device displays the weight in the selected unit. — The availability of units depends on national legislation and is therefore country-specific.
DISP.DIG.	ALL*	"Show all decimal places": All decimal places are shown in the display. The setting change is not available on conformity-assessed devices.
	MINUS 1	"Last decimal place off": The last decimal place is switched off.
CAL./ADJ.	EXT.CAL.	The [Adjust] button starts an external calibration and adjustment process with the preset calibration weight.
	E.CAL.USR.	The [Adjust] button starts an external calibration and adjustment process with the user-defined calibration weight value.
	REPRO	Starts the reproducibility test. Determines the current calibration frequency with a user weight.
	SELECT	The interface [CAL] is assigned a selection of permitted menu items from "CAL./ADJ."
	INT.CAL.*	The [Adjust] button starts an internal calibration and adjustment process.
CAL.SEQ.	ADJUST*	The adjustment starts automatically after the calibration.

* Factory setting

Parameter	Setting values	Explanation
	CAL.-ADJ.	The adjustment must be started or exited manually after calibration with the [Confirm] button.
ON Z/T	ON*	Activates the initial taring / zeroing. The device is tared or zeroed after it is switched on.
	OFF	Deactivates the initial taring / zeroing: After it is switched on, the device shows the same value as before it was last switched off.
ISOCAL	OFF	Switches the isoCAL function off.
	NOTE	If the balance needs to be calibrated: The [isoCAL] button flashes. The isoCAL function must be manually triggered with the [Adjust] button.
	ON*	Activates the isoCAL function. The device is automatically adjusted as soon as a trigger starts the isoCAL function.
EXT.CAL.	UNLCKED*	Activates the external calibration / adjustment function under [CAL./ADJ.].
	LOCKED	Deactivates the external calibration / adjustment function under [CAL./ADJ.].

* Factory setting

7.3.2 "SETUP" / "GEN.SERV." Menu

Parameter	Setting values	Explanation
MENU.RES.	DEFAULT	Resets the system settings to the factory default settings.
	NO*	Deactivates the option of resetting the device menu.

* Factory setting

7.3.3 "DEVICE" / "RS232" Menu

Parameter	Setting values	Explanations
DAT.REC.	XBPI	Extended range of commands to control numerous balance functions with binary protocol for direct communication with the device.
	SBI*	Enables SBI communication. The data is output to a PC or control unit. Enables the use of ESC commands from a PC to control the basic balance functions with ASCII protocol.
	REM.DISP.	Enables data output on another display.
	BARCODE	Allows for the connection of an approved barcode scanner.
	YDP20	Sets the standard settings of YDP20 printers.
	YDP30	Sets the standard settings of YDP30 printers.
	OFF	Deactivates the automatic data output.
BAUD	600, 1200, 2400, 4800, 9600*, 19200, 38400, 57600, 115200	Sets the baud rate to the selected value.

* Factory setting

Parameter	Setting values	Explanations
PARITY	ODD*	Applies an odd parity.
	EVEN	Applies an even parity.
	NONE	Does **not** apply a parity.
HANDSHK.	SFTWARE	Sets the handshake protocol to software handshake.
	HRDWARE*	Sets the handshake protocol to hardware handshake.
	NONE	Does **not** set a handshake protocol.
DATABIT	7 BITS	Sets the number of data bits to 7.
	8 BITS*	Sets the number of data bits to 8.

* Factory setting

7.3.4 "DEVICE" / "USB" Menu

Parameter	Setting values	Explanations
DAT.REC.**	XBPI	Extended range of commands to control numerous balance functions with binary protocol for direct communication with the device.
	SBI*	Enables SBI communication. The data is output to a PC or control unit. Enables the use of ESC commands from a PC to control the basic balance functions with ASCII protocol.
	REM.DISP.	Enables data output on another display.
	PC.SPREA.	Enables data output to a spreadsheet program via a direct PC connection.
	YDP20	Sets the standard settings of YDP20 printers.
	YDP30	Sets the standard settings of YDP30 printers.
	PC.TEXT	The balance transmits the data via keyboard command to the currently opened application on the PC in text format.
	OFF	Deactivates the data output.
BAUD**	600, 1200, 2400, 4800, 9600*, 19200, 38400, 57600, 115200	Sets the baud rate to the selected value.
PARITY**	ODD*	Applies an odd parity.
	EVEN	Applies an even parity.
	NONE	Does **not** apply a parity.
HANDSHK.**	SFTWARE	Sets the handshake protocol to software handshake.
	HARDW.	Sets the handshake protocol to hardware handshake.
	NONE*	Does **not** set a handshake protocol.

* Factory setting

** Are blocked if "PRINTER" or "REM.DISP." are displayed under "DEV.USED"

Parameter	Setting values	Explanations
DATABIT**	7 BITS	Sets the number of data bits to 7.
	8 BITS*	Sets the number of data bits to 8.
DEV.USED	NONE*, PRINTER, VIRT.COM, PC HOST, REM.DISP.	Indicates which connection is detected at the USB port.

* Factory setting

** Are blocked if "PRINTER" or "REM.DISP." are displayed under "DEV.USED"

7.3.5 "DEVICE"/"EXTRAS" Menu

Parameter	Setting values	Explanation
MENU	EDITABL.*	Activates write access. The menu parameters can be changed.
	RD.ONLY	Activates read access. The menu parameters **cannot** be changed.
SIGNAL	OFF	Switches the acoustic signal off.
	ON*	Switches the acoustic signal on.
KEYS	UNLOCK.*	Deactivates the button lock.
	LOCKED	Activates the button lock.
EXT.KEY	PRINT	Assigns the print function to the external key.
	CAL.	Assigns the calibration and adjustment function selected under [CAL./ADJ.] to the external key.
	CF	Assigns the [Back] function to the external key.
	ENTER	Assigns the [Confirm] function to the external key.
	ZERO	Assigns the [Zero] function to the external key.
	TARE	Assigns the [Tare] function to the external key.
	GLP END	Assigns the [GLP] function to the external key.
	NO*	**No** function is assigned to the external key.
ON MODE	ON/STDB.*	The [On/Off] button switches between on / standby with time.
	ON/OFF	The [On/Off] button switches between on / standby without time..
	AUTO ON	Changes the function of the [On/Off] button: The device **no longer** switches off or to standby mode, instead it starts a boot process.
LIGHT	OFF	Deactivates the lighting on the operating display.
	ON*	Activates the lighting on the operating display.

* Factory setting

7.3.6 "DATA.OUT." / "COM. SBI" Menu

Parameter	Setting values	Explanations
COM. OUTP.	IND.NO*	Activates the manual data output without stability.
	IND.AFTR	Activates the manual data output after stability.
	AUTO.W/O	Activates the automatic data output without stability.
	AUTO W/	Activates the automatic data output after stability.
STOP.AUT.	OFF*	Deactivates the option to abort the automatic data output.
	ON	The automatic data output is aborted by pressing the [Print] button or a software command.
AUTO.CYC.	EACH.VAL*	Starts the automatic data output with a cycle after each value.
	AFTER 2	Starts the automatic data output with a cycle after every 2nd value.
	INTERV.	The output rate can be set from 0 - 9999 seconds under "INPUT/INTERV.".
FORMAT	22CHARS*	The data output provides 22 characters per line (16 characters for the measured value and 6 characters for identifiers).
	16CHARS	The data output provides 16 characters per line for the measured value.
	EXTR.LIN.	The data output provides an additional line with the date, time, and weight value.
AUTO.TAR.	OFF*	Deactivates automatic taring after data output.
	ON	The device automatically tares after data output.

* Factory setting

7.3.7 "DATA.OUT." / "PRNT.PAR." Menu

Parameter	Setting values	Explanation
ACTIVAT.	MAN. NO	Manual without stability: The print process can be started manually at any time.
	MAN.AFTR*	Manual after stability: After pressing the [Print] button, the print command is only executed once stability is achieved.
	INTERV.N.	The output rate can be set from 0–9999 seconds under "INPUT/INTERV." once stability is achieved.
	INTERV.A.	The output rate can be set from 0 -9999 seconds under "INPUT/INTERV." without stability.
	AUTO.LC	Automatically at load change: The print process starts after every load change.
FORMAT	22CHARS*	The printer output prints 22 characters per line (16 characters for the measured values and 6 characters for identifiers)
	EXTR.LIN.	The printer output prints an additional line with the date, time, and weight value.

* Factory setting

Parameter	Setting values	Explanation
PRT.INIT.	OFF	Deactivates the output of the application parameters.
	ALL*	The print command prints all parameters.
	MAIN.PAR.	The print command only prints the main parameters.
GLP	OFF*	Deactivates the GLP printout.
	CAL.-ADJ.	Activates the GLP printout for all calibration and adjustment processes.
	ALWAYS	The GLP printout is always switched on. All printouts contain a GLP header and a GLP footer.
TAR./PRT.	OFF*	Deactivates automatic taring after printer output.
	ON	Automatically tares the device after every printout.
TIME	24H*	Sets the time to 24-hour mode.
	12H	– Sets the time to 12-hour mode (AM/PM). – Is blocked for ISO format.
DATE	DD.MMM.YY*	Sets the date display format to DD.MMM.YY
	MMM.DD.YY	Sets the date display format to MMM.DD.YY
	YY.MM.DD	– Sets the date display format to ISO FORMAT YYYY-MM-DD. – Sets the time to 24-hour mode.

* Factory setting

7.3.8 "DATA.OUT." / "PC.DIREC." Menu

Parameter	Setting values	Explanations
DEC.SEP.	POINT*	Sets a point as a decimal separator.
	COMMA	Sets a comma as a decimal separator.
OUT.FORM.	TXT+NUM.*	Exports text and numbers.
	ONLY.NUM.	Only exports numbers.

* Factory setting

7.3.9 "APPLIC." / "WEIGH" Menu

Parameter	Setting values	Explanations
UNIT	ON*	Activates the "Toggle between weight units" touch function.
	OFF	Deactivates the "Toggle between weight units" touch function.
RECALL	ON	Activates the saving of the last stable weight value not equal to 0.
	OFF*	Deactivates saving.
APP.FILT.	ON*	Activates the "Application filter" touch function.
	OFF	Deactivates the "Application filter" touch function.
AMBIENT	ON*	Activates the "Ambient conditions" touch function.
	OFF	Deactivates the "Ambient conditions" touch function.

* Factory setting

7.3.10 "APPLIC." / "COUNT" Menu

Parameter	Setting values	Explanation
RESOLUT.	DISP.ACC.*	Sets the resolution to "display resolution". The "Counting" application is started with the displayed value.
	10-FOLD	Sets the resolution to 10-times more accurate than "display resolution".
	100.FOLD	Sets the resolution to 100-times more accurate than "display resolution".
REF.UPDT.	OFF*	Deactivates automatic reference sample updating.
	AUTO	Activates the automatic reference sample updating.

* Factory setting

7.3.11 "APPLIC." / "PERCENT" Menu

Parameter	Setting values	Explanation
DEC.PLCS	NONE	The result of the "Weighing in Percent" application is displayed without decimal places.
	1 DEC.PL.*	The result of the "Weighing in Percent" application is displayed to 1 decimal place.
	2 DEC.PL.	The result of the "Weighing in Percent" application is displayed to 2 decimal places.
	3 DEC.PL.	The result of the "Weighing in Percent" application is displayed to 3 decimal places.

* Factory setting

7.3.12 "APPLIC." / "NET.TOT." Menu

Parameter	Setting values	Explanation
PRT.COMP.	OFF	Deactivates the component printout.
	ON*	Activates the component printout.

* Factory setting

7.3.13 "APPLIC." / "TOTAL" Menu

Parameter	Setting values	Explanation
PRT.COMP.	OFF	Deactivates the component printout.
	ON*	Activates the component printout.

* Factory setting

7.3.14 "APPLIC." / "ANIM.WG" Menu

Parameter	Setting values	Explanation
ACTIVIT.	CALM	Sets the intensity of the "Animal activity" to "calm". Recommended for minor movements of the sample, e.g. caused by placement on the weighing pan.
	ACTIVE*	Sets the intensity of the "Animal activity" to "active". Recommended for medium movements of the sample, e.g. caused by placement on the weighing pan.
	V.ACTIVE	Sets the intensity of the "Animal activity" to "very active". Recommended for very active movements of the sample, e.g. caused by placement on the weighing pan.
START	MANUAL	The "Animal weighing" application must be manually selected in the start screen.
	AUTO*	Sets the trigger to start the "Animal weighing" application to "automatic".

* Factory setting

7.3.15 "APPLIC." / "CALC." Menu

Parameter	Setting values	Explanation
METHOD	MUL.*	Specifies multiplication as the method of calculation for the "Calculation" application.
	DIV.	Specifies division as the method of calculation for the "Calculation" application.
DEC.PLCS	NONE	The result of the "Calculation" application is displayed without decimal places.
	1 DEC.PL.*	The result of the "Calculation" application is displayed to 1 decimal place.
	2 DEC.PL.	The result of the "Calculation" application is displayed to 2 decimal places.
	3 DEC.PL.	The result of the "Calculation" application is displayed to 3 decimal places.

* Factory setting

7.3.16 "APPLIC." / "DENSITY" Menu

Parameter	Setting values	Explanation
DEC.PLCS	NONE	The result of the "Density determination" application is displayed without decimal places.
	1 DEC.PL.*	The result of the "Density determination" application is displayed to 1 decimal place.
	2 DEC.PL.	The result of the "Density determination" application is displayed to 2 decimal places.
	3 DEC.PL.	The result of the "Density determination" application is displayed to 3 decimal places.

* Factory setting

7.3.17 "APPLIC." / "STATIST." Menu

Parameter	Setting values	Explanation
PRT.COMP.	OFF	Deactivates the component printout.
	ON*	Activates the component printout.
TAR.STAT.	OFF*	Deactivates automatic taring after the components are saved.
	ON	Activates automatic taring after the components are saved.

* Factory setting

7.3.18 "APPLIC." / "PEAK.HLD." Menu

Parameter	Setting values	Explanation
APPLY	AT STAB.*	Peak values are applied when there is stability.
	W/O STB.	Peak values are applied without stability.

* Factory setting

7.3.19 "APPLIC." / "CHECK.WG." Menu

Parameter	Setting values	Explanation
INPUT	MANUAL*	The min / max limits are entered manually.
	WG.VALUE	The entry of the min / max limits is carried out by applying the weight value.
AUTO.PRT.	OFF*	The automatic printing is switched off.
	ON	With automatic printing, all values are exported.
	OK ONLY	With automatic printing, only values that are within the control range are exported.
	NOT OK	With automatic printing, only values that are outside the control range are exported.

* Factory setting

7.3.20 "INPUT" Menu

Parameter	Setting values	Setting values	Explanation
DEV. ID		Max 14 characters 09-0, A-Z, - , empty	Saves the entered ID number for the device.
LOT ID	PRINT	ON	Activates the output of the lot ID number during GLP output.
		OFF*	Deactivates the output of the lot ID number during GLP output.
	CONTENT**	Max 14 characters 09-0, A-Z, - , empty	Content of the LOT ID.
SPL. ID	PRINT	ON	Activates the output of the SPL. ID number during GLP output.
		OFF*	Deactivates the output of the SPL. ID number during GLP output.
	START V.****	Max 14 characters 09-0, empty	Start value of the SPL. ID.
	MODE**	COUNT.UP*	The SPL. ID number is counted up on each printout.
		COUNT.DN	The SPL. ID number is counted down on each printout.
		SCAN***	The SPL. ID number is read in by the barcode scanner. Printing then occurs automatically.
DATE			Saves the entered date.
TIME			Saves the entered time.
USER.PW		Max 7 characters 09-0, A-Z, - , empty	Saves the entered user password.
DEL. PW.*****		YES	Deletes the entered password.
		NO*	Does not delete the entered password.
SERV.PW		Max 7 characters 09-0, A-Z, - , empty	Activates service mode.
CAL.WT.			Changes the calibration weight for the adjustment or calibration process with the user-defined weight value.
INTERV.			The SBI output rate can be set from 0 - 9999 seconds.

* Factory setting

** Only visible if "PRINT" / "ON" is selected

*** Only possible if "BARCODE" is selected (see Chapter "7.3.3 "DEVICE" / "RS232" Menu", page 23)

**** Only visible if "SPL. ID" / "MODE" / "SCAN" is **not** selected.

***** Only visible if the user password is available.

7.3.21 “INFO” Menu

Parameter	Setting values	Explanation
VERSION		Displays the version number of the control module.
SER. NO.		Displays the serial number of the device.
Model		Displays the type designation of the device.
BAC VER.		Displays the version number of the weight sensor.

* Factory setting

7.3.22 “LANGUAG.” Menu

Parameter	Setting values	Explanation
LANGUAG.	ENGLISH, DEUTSCH, FRANC., ITAL., ESPANOL, PORTUG., РУССКИЙ, POLSKI	Defines the menu language.

* Factory setting

8 Operation

8.1 Switching the Device On and Off

Requirements

The device is connected to the power supply.

Procedure

- ▶ ⚠ **CAUTION** Pointed or sharp-edged objects may damage the operating display!
- ▶ Only touch the operating display with your fingertips.
- ▶ To switch the device on: Press the [On/Off] button.
- ▶ To switch the device off: Press and hold the [On/Off] button.

8.2 Waiting for the Warm-up Time

In order to provide accurate weighing results, the device must have reached the necessary operating temperature. The operating temperature is reached after the warm-up time. The warm-up time starts when the device is switched on.

Procedure

- ▶ Switch on the device.
- ▶ Wait until the operating temperature is reached (warm-up time see Chapter “15.7 Warm-up Time”, page 44).

M If a weighing process is carried out on a conformity-assessed device during the warm-up time: The weight value is marked as **invalid**.

8.3 Leveling the Device with a Level

Unevenness at the installation site of the device may result in incorrect weighing results. Leveling balances out unevenness at the installation site.

Procedure

▶ In order to level the device: Bring the air bubble into the middle of the circular marking. To do so, turn the leveling feet to the left or right.

8.4 Overview of Calibration and Adjustment

During calibration, a calibration weight is used to determine the deviation of the displayed value from the actual value. The subsequent adjustment eliminates this deviation.

We recommend regular calibration and adjustment:

- Daily, every time the device is switched on
- After every leveling
- After changing the ambient conditions (temperature, humidity, or air pressure)
- After setting the device up at a new installation site

8.5 Calibrating and Adjusting Device with isoCAL Function (Only Model I-1x)

Triggers for the automatic start of the isoCAL function are:

- The ambient temperature has changed since the last adjustment process.
- The interval time was exceeded (interval time, see Chapter "15.7 Warm-up Time", page 44).

M If this relates to a conformity-assessed model: The device has been disconnected from the power supply since the last adjustment.

Requirements

- The automatic or manual start of the isoCal function is set in the menu (see Chapter "7.2.1 Switching the isoCAL Function On or Off (Only Model I-1x)", page 20).
- The device is **not** located in the menu settings.
- The load on the weighing pan remains unchanged for 2 minutes.
- The load on the scales amounts to no more than 2% of the maximum load.
- The device does **not** register an input for 2 minutes.

Procedure

▶ If the automatic start of the isoCAL function is triggered:
  ▷ The [isoCAL] button flashes in the operating display.
  ▷ The operating display shows "CAL." for 19 seconds.
  ▷ If **no** load change or **no** operation takes place on the device before the expiration of the time display: The isoCAL function starts.

▶ If the manual start of the isoCAL function is triggered:
  ▷ The [isoCAL] button flashes in the operating display.
  ▶ Press the [isoCAL] button.
  ▷ The isoCAL function starts.

8.6 Calibrating and Adjusting the Device Internally (Only Model I-1x)

Requirements

- The weighing pan is unloaded.
- The operating display shows a stable weight value.
- The internal calibration and adjustment function is set (see Chapter "7.2.2 Setting Internal Calibration and Adjustment (Only Model I-1x)", page 20).

Procedure

- ▶ Press the [Zero] button.
- ▶ Press the [Adjust] button.
- ▷ The weight value is displayed.
- ▶ If the calibration function with subsequent automatic adjustment is selected:
  - ▷ The "CAL.RUN." display appears in the operating display during the process.
  - ▷ The "CAL.END" display indicates the end of calibration.
- ▶ If the calibration function without subsequent automatic adjustment is selected:
  - ▶ Press the [Confirm] button.
  - ▷ The calibration process starts.
  - ▷ The "CAL.RUN." display appears in the operating display during the process.
  - ▷ The calibration error is displayed.
  - ▶ Press the [Confirm] button.
  - ▷ The adjustment is performed.
  - ▷ The "CAL.END" display indicates the end of calibration.

8.7 Externally Calibrating and Adjusting the Device

Material	Calibration and adjustment weight

Requirements

- The weighing pan is unloaded.
- The operating display shows a stable weight value.
- The external calibration and adjustment function is set (see Chapter 7.2.3, page 20).
- The preset weight value for the adjustment weight or the user-defined weight value for the adjustment weight is selected (see Chapter 7.2.3, page 20).

Procedure

- ▶ Press the [Zero] button.
- ▶ Press the [Adjust] button.
- ▶ Place the indicated calibration and adjustment weight on the balance.
- ▷ The weight value is displayed.
- ▶ If the calibration with subsequent automatic adjustment function is selected and the calibration weight placed on the device is within the specified limits:
  - ▷ The adjustment process starts.
  - ▷ If the "+" prefix was displayed: The applied weight is too big.
  - ▷ If the "-" prefix was displayed: The applied weight is too small.
- ▷ The "CAL.END" message indicates the end of calibration.
- ▶ Remove the calibration weight.
- ▶ If the calibration without subsequent automatic adjustment function is selected and the calibration weight placed on the device is within the specified limits:
  - ▶ Press the [Confirm] button.
  - ▷ The adjustment process starts.
  - ▷ If the "+" prefix was displayed: The applied weight is too big.
  - ▷ If the "-" prefix was displayed: The applied weight is too small.
- ▷ The "CAL.END" message indicates the end of calibration.
- ▶ Remove the calibration weight.

8.8 Printing Results of the Calibration and Adjustment Process

The results of the calibration and adjustment process can be printed in a GLP printout.

Procedure

- ▶ Set the GLP printout in the menu (setting parameters, see Chapter 7.3.7, page 26).
- ▶ Calibrate the device.
- ▷ Once the calibration is complete: The printing process starts.

8.9 Weighing

Requirements

- The device has been leveled.
- The device is calibrated and adjusted.

NOTICE

Chemicals may damage the device or accessories!

Chemicals can attack the device or the connected accessories internally and externally. This may damage the device and accessories.

▶ Use appropriate containers when weighing chemicals.

Procedure

▶ Zero the device. In order to do so, press the [Zero] button.
▶ If a container is being used for the sample:
  ▶ Tare the device. In order to do so, press the [Tare] button.
  ▶ Place the sample in the container.
▶ If **no** container is used for the sample: Place the sample on the weighing pan.
▷ The weight value is displayed depending on the selected application program.

8.10 Setting or Changing an Application

Procedure

▶ In the "APPLIC." menu, select an application, e.g. "STATIST."
▶ Press the [Confirm] button.
▶ Exit the menu.

8.11 Running Applications (Examples)

8.11.1 Executing the "Toggle Between Weight Units" Function

The "Toggle between weight units" function enables a switch between a maximum of four different units. The selected basic unit is displayed every time the device is started (see "UNIT", Chapter "7.3.1 "SETUP" / "BALANCE" Menu", page 21). The units can be set during the weighing process and the decimal places can be adjusted.

Requirements

The "Toggle between weight units" function is activated (see Chapter "7.3.9 "APPLIC." / "WEIGH" Menu", page 27).

M The weight value must be valid.

Procedure

▶ To switch the displayed weight unit during weighing or before an application: Press the [Toggle between weight units] button until the desired unit is displayed.
▷ The current weight value is displayed in the selected unit.

8.11.2 Selecting Convertible Units and their Decimal Places

Procedure

▶ Press and hold down the [Toggle between weight units] button.
▶ Select one of the parameters "Unit 1" – "Unit 4" in the submenu. To do so, press the [Confirm] button.
▶ Select the desired unit. To do so, press the [Confirm] button.
▶ Specify the decimal places for the selected unit. To do so, press the [Confirm] button once again.
▶ Select the desired number of display digits. To do so, press the [Confirm] button.

8.11.3 Running the "Statistics" Application

The "Statistics" application saves up to 99 weight values and evaluates these statistically.

The following values are saved and exported:

- Number of components
- Mean value
- Standard deviation
- Variation coefficient
  Sum of all values
- Lowest value (minimum)
- Highest value (maximum)
- Spread: Difference between maximum and minimum

Requirements

- A printer or a PC is connected and configured.
- The "STATIST." application is selected.

Procedure

▶ Place a sample on the weighing pan.
▶ To save the weight value: Press the [Confirm] button.
▷ The position of the saved value is displayed, e.g. "NO 1".
▷ The recording of the statistics starts.
▶ Remove the sample on the weighing pan.
▶ To save the next value:
  ▶ Place a new sample on the weighing pan and press the [Confirm] button.
▶ To switch between the display of the current weight value, the number of saved components, and the calculated mean in the results display: Press the [Up] or [Down] button.
▶ To delete all saved values: Press the [Back] button.
▷ The evaluation is printed and the active GLP print is ended.
▶ To print and exit the current statistics, and to delete the saved values: Press the [GLP] button.

8.12 Printing Weighing Result with ID Marking

The device, the sample and a batch can be assigned an ID number. The ID numbers are exported during GLP-compliant printing.

Requirements

– The identity number is specified (see Chapter "7.3.20 "INPUT" Menu", page 31).
– The printing of the lot ID line in the GLP printout is activated in the menu (see Chapter "7.3.20 "INPUT" Menu", page 31).
– The "SPL. ID" output is activated in the menu.
– The GLP-compliant printout is activated (see Chapter "7.3.7 "DATA.OUT." / "PRNT.PAR." Menu", page 26).

Procedure

▶ Start the printout. To do so, press the [Print] button.
▷ The GLP header is printed with the ID marking of the LOT ID set in the menu and the current weight value.
▷ The [GLP] button appears in the operating display.
▶ Confirm the [PRINT] button.
▷ The SPL. ID and the current weight value are exported.
▶ Confirm the [PRINT] button.
▷ The SPL. ID and the current weight value are exported.
▶ To exit the GLP printout: Press the [GLP] button.
▷ The GLP footer is printed.

9 Cleaning and Maintenance

9.1 Detaching the Draft Shield

9.1.1 Detaching the Analytical Draft Shield, Weighing Pan, and Associated Components

Material: 1 soft support base

Requirements

– The device is switched off.
– The device is disconnected from the power supply.

Procedure

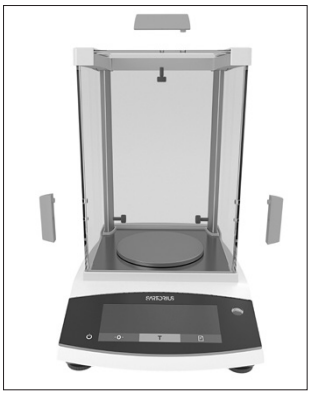

▶ Loosen the screws on the inner side of the side panels by turning. This allows the handles on the side panels and the upper panel to be removed.
▶ ⚠ **CAUTION** Glass breakage due to incorrect handling!
▶ Slide the side panels and upper panel all the way back and out of the guide rails.
▶ Place the side panels and the upper panel on a soft surface.
▶ If this relates to a device with a shield disk: Remove the weighing pan, the pan support, and the shield disk.
▶ If this relates to a device without a shield disk: Remove the weighing pan and the pan support.

9.1.2 Dismantle the Round Draft Shield, Weighing Pan, and Associated Components

Material: 1 soft support base

Requirements

– The device is switched off.
– The device is disconnected from the power supply.

Procedure



- ▶ Remove the cover and the round glass ring and place on a soft surface.
- ▶ Remove the weighing pan, pan support, and the base of the draft shield.

9.2 Cleaning the Device

NOTICE

Corrosion or damage to the device due to unsuitable cleaning agents.

- ▶ Do **not** use corrosive, chloride-containing, or aggressive cleaning agents.
- ▶ **Do not** use cleaning agents that contain abrasive ingredients, e.g. scouring agents, steel wool.
- ▶ **Do not** use solvent-based cleaning agents.
- ▶ Only use suitable cleaning agents (materials, see Chapter "15.6 Materials", page 44) and observe the product information for the cleaning agent used.

Procedure

- ▶ **NOTICE** Malfunction or damage to the device due to the ingress of moisture or dust.
  - ▶ Only slightly moisten cleaning materials, such as cloths.
  - ▶ Remove dust and powdery sample residue with a brush or hand-held vacuum cleaner.
- ▶ Wipe the device and the associated components with a slightly damp cloth. Use a mild soapy solution or a suitable cleaning agent for more severe contamination.

9.3 Installing the Draft Shield

9.3.1 Installing the Analytical Draft Shield

Procedure

- ▶ If this relates to a device with a shield disk: Install the shield disk, the pan support, and the weighing pan.
- ▶ If this relates to a device without a shield disk: Install the pan support and the weighing pan.

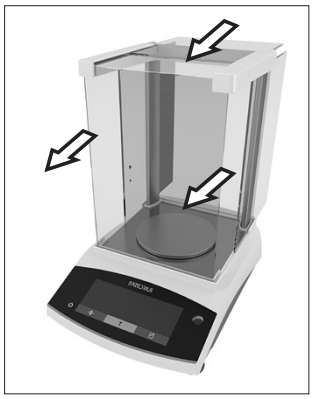

- ▶ Slowly slide the side panels and the upper panel into the frame rails.
- ▶ Hold the handles on the side panels or the upper panel from the outside and fasten to the inner side with the screws.

- ▶ Connect the device to the power supply (see Chapter "6.2 Connecting the Power Supply", page 19).

9.3.2 Installing the Round Draft Shield

Procedure

- ▶ Install the draft shield (see Chapter "5.4.2 Installing a Device with Round Draft Shield", page 18).
- ▶ Connect the device to the power supply (see Chapter "6.2 Connecting the Power Supply", page 19).

9.4 Maintenance Schedule

Interval	Component	Action
Regularly; depending on the operating conditions	Device	Contact Sartorius Service.

9.5 Software Update

For a software update, contact Sartorius Service.

10 Malfunctions

10.1 Warning Messages

Warning message	Fault	Cause	Remedy	Chapter, page
APP.ERR.	The device has measured an invalid weight value.	The applied weight is too low.	Increase the applied weight to more than the minimum load.	
		The weight value is negative.		
		No sample has been placed on the balance.	Place the sample on the balance.	
DIS.ERR.	The value to be output **cannot** be shown in the operating display.	The data to be displayed is **not** compatible with the set display format.	Adjust the display settings in the menu, e.g. resolution, unit, decimal places.	
HIGH or ERR 55	The device is overloaded.	The device's maximum weighing capacity has been exceeded.	Reduce the applied weight to below the device's maximum weighing capacity.	
LOW or ERR 54	The modulation of the weighing converter inside the device is too low.	**No** weighing pan has been placed on the balance.	Insert the weighing pan into the device and switch the device off and on again.	
		A previously forgotten weight was removed after starting the device.		
		An error exists in the weighing system or in the device electronics.	Contact Sartorius Service.	
COMM.ERR.	The device is **not** receiving any weight values.	**No** communication exists between the control module and the weigh cell.	Wait until the control module restores the communication with the weigh cell.	
			If the problem occurs again: Contact Sartorius Service.	
PRT.ERR.	The [Print] key is locked.	The data interface for print output is set to xBPI mode.	Reset the menu to the factory settings.	
			If the problem occurs again: Contact Sartorius Service.	

Warning message	Fault	Cause	Remedy	Chapter, page
SYS.ERR.	The system data is faulty.	A memory error exists in the control module.	Switch the device off and on again.	
			If the problem occurs again: Contact Sartorius Service.	
ERR 02	The device **cannot** be calibrated when starting the calibration function due to a zero point error.	The device was **not** zeroed before calibration.	Zero the device. Check the preload and set if necessary.	
		The device is loaded.	Remove the sample from the weighing pan.	
ERR 10	Taring is **not** possible.	The device **cannot** be manually tared because an application program has the tare memory reserved.	To release the tare memory: Exit the application program with the [Back] button.	
ERR 11	The weight value **cannot** be saved in the tare memory.	The weight value is negative or "zero".	Check the sample being weighed. Zero the device before placing the sample on the balance if necessary.	

10.2 Troubleshooting

Fault	Cause	Remedy	Chapter, page
The operating display is blank.	The device is disconnected.	Check the connection to the power supply.	
	The power supply unit is **not** connected.	Connect the power supply cable to the power supply.	
The displayed weight value changes constantly.	The installation site is unstable.	Adjust the parameter for the ambient temperatures.	
		Change the installation site.	
	A foreign object is positioned between the weighing pan and the housing.	Remove the foreign object.	
The weight readout displayed by the device is obviously wrong.	The device has **not** been calibrated and adjusted.	Calibrate and adjust the device.	8.4, 33
	The device was **not** tared before weighing.	Tare the device.	
For a conformity-assessed device: The [**Invalid** weight value] display appears.	The cause of this fault is displayed after pressing the [Change] key. At the same time, the "Toggle between weight units" function is locked.		
	ISOCAL.E.: The device needs to be calibrated and adjusted.	Calibrate and adjust the device.	8.4, 33
	WARMU.xx.: The device is in the warm-up phase and has **not** yet reached its operating temperature. xx = remaining time in minutes	Comply with the warm-up time after switching the device on.	15.7, 44
	VALUE.ERR.: The displayed value is invalid.	Set the device to zero.	

11 Decommissioning

11.1 Decommissioning the Device

Procedure

- ▶ Switch off the device.
- ▶ Disconnect the device from the power supply.
- ▶ Disconnect the device from all connected devices and all accessories, e.g. printer.
- ▶ Clean the device (see Chapter 9.2, page 37).

12 Transport

12.1 Transporting the Device

Procedure

- ▶ ⚠ **CAUTION** Risk of injury from breaking glass! Glass components can break if they fall or are handled incorrectly. Glass fragments can cause cuts.
  - ▶ Only lift the device by its base, **not** by the draft shield.
  - ▶ When lifting and transporting, ensure that **no** personnel or objects are in the way.
- ▶ Use suitable conveyance devices for long transport routes.

13 Storage and Shipping

13.1 Storage

Procedure

- ▶ Switch off the device.
- ▶ Disconnect the device from the power supply.
- ▶ Disconnect the device from all connected devices, e.g. printer.
- ▶ Store the device according to the ambient conditions (see Chapter 15.1, page 42).

13.2 Returning the Device and Parts

Defective devices or parts can be sent back to Sartorius. Returned devices must be clean, decontaminated, and packed correctly, e.g. in their original packaging.

Transport damage as well as measures for subsequent cleaning and disinfection of the device or parts by Sartorius shall be charged to sender.

⚠ WARNING

Risk of injury due to contaminated devices.

Devices contaminated with hazardous materials (nuclear, biological, or chemical – NBC) will **not** be accepted for repair or disposal.

- ▶ Observe the information on decontamination (see Chapter 14.1, page 41).

Procedure

- ▶ Switch off the device.
- ▶ Disconnect the device from the power supply.
- ▶ Contact Sartorius Service for instructions on how to return devices or parts (please refer to our website at www.sartorius.com for return instructions).
- ▶ Pack the device and its parts properly for return, e.g. in their original packaging.

14 Disposal

14.1 Information on Decontamination

The device does **not** contain any hazardous materials that would necessitate special disposal actions.

Contaminated samples used during the process are potentially hazardous materials that could cause biological or chemical hazards.

If the device has come into contact with hazardous substances: Steps must be taken to ensure proper decontamination and declaration. The operator is responsible for adhering to local government regulations on the proper declaration for transport and disposal and the proper disposal of the device.

⚠ WARNING

Risk of injury due to contaminated devices.

Devices contaminated with hazardous materials (NBC contamination) will **not** be accepted by Sartorius for repair or disposal.

14.2 Disposing of the Device and Parts

14.2.1 Information on Disposal

The device and the device accessories must be disposed of properly by disposal facilities.

A lithium cell battery, type CR2032, is installed inside the device. Batteries must be disposed of properly by disposal facilities.

The packaging is made of environmentally friendly materials that can be used as secondary raw materials.

14.2.2 Disposal

Requirements

The device has been decontaminated.

Procedure

- ▶ Dispose of the device. Follow the disposal instructions on our website (www.sartorius.com).
- ▶ Inform the disposal facility that there is a lithium cell battery, type CR2032, installed inside the device.
- ▶ Dispose of the packaging in accordance with local government regulations.

15 Technical Data

15.1 Ambient Conditions

	Unit	Value
Installation site: For indoor use only, max. height above sea level	m	3000
Temperature		
Environment (metrological data)*	°C	+10 – +30
Environment	°C	+5 – +40
Storage and transport	°C	-10 – +60
Relative humidity**		
At temperatures up to 31 °C, **non**-condensing	%	15 – 80
Then linear decrease from max. 80 % at 31 °C to max. 50 % at 40 °C		
No heat from heating systems or direct sunlight		
No electromagnetic fields		
* For conformity-assessed (verified) balances in accordance with EU requirements, refer to the information on the balance.		
** For conformity-assessed (verified) balances in accordance with EU requirements, the legal regulations apply.		

15.2 Contamination Type, Overvoltage Category (Device)

	Unit	Value
Pollution level according to IEC 61010-1		2
Overvoltage category according to IEC 60664-1		I

15.3 Power Supply

15.3.1 Power Supply Device

	Unit	Value
Input voltage	V_{DC}	15 (±10 %)
Power consumption, max.	W	4
Only by Sartorius power supply unit YEPS01-15V0W		

15.3.2 Power Supply Unit

	Unit	Value
Type: Sartorius power supply unit YEPS01-15V0W		
Primary		
Voltage	V_{AC}	100 – 240 (±10 %)
Frequency	Hz	50 – 60
Current consumption, maximum	A	0.2
Secondary		
Voltage	V_{DC}	15 (±5 %)
Current, maximum	A	0.53
Short-circuit protection		Electronic
Protection class according to IEC 60950-1		II
Pollution level according to IEC 61010-1		2
Overvoltage category according to IEC 60664-1		II
Other data: See label on the power supply unit		

15.4 Electromagnetic Compatibility

Interference resistance:
Suitable for use in industrial areas
Transient emissions:
Class B
Suitable for use in residential areas and areas that are connected to a low voltage network that also supplies residential buildings.

15.5 Backup Battery

	Unit	Value
Lithium battery, type CR2032		
Service life at room temperature, minimum	Years	10

15.6 Materials

Housing	Polybutylene terephthalate (PBT)
Control module	Glass
Draft shield	Glass/polybutylene terephthalate (PBT)

15.7 Warm-up Time

	Unit	Value
Device, approx.	h	2

15.8 Interfaces

15.8.1 Specifications of the RS232 Interface

Type of interface: Serial interface
Interface operation: Full duplex
Level: RS232
Connection: D-sub connector, 9-pin
Maximum cable length: 10 m
Pin assignment

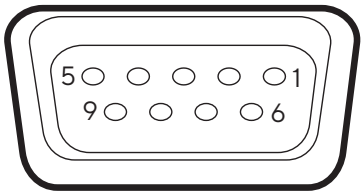

Pin 1: Not assigned
Pin 2: Data output (TxD)
Pin 3: Data input (RxD)
Pin 4: Not assigned
Pin 5: Internal ground
Pin 6: Not assigned
Pin 7: Clear to Send (CTS)
Pin 8: Request to Send (RTS)
Pin 9: Universal key

15.8.2 Specifications for the USB-C Interface

Communication: USB UTL
Connectable devices: Sartorius printers, Sartorius second display or PC

15.9 Device Dimensions

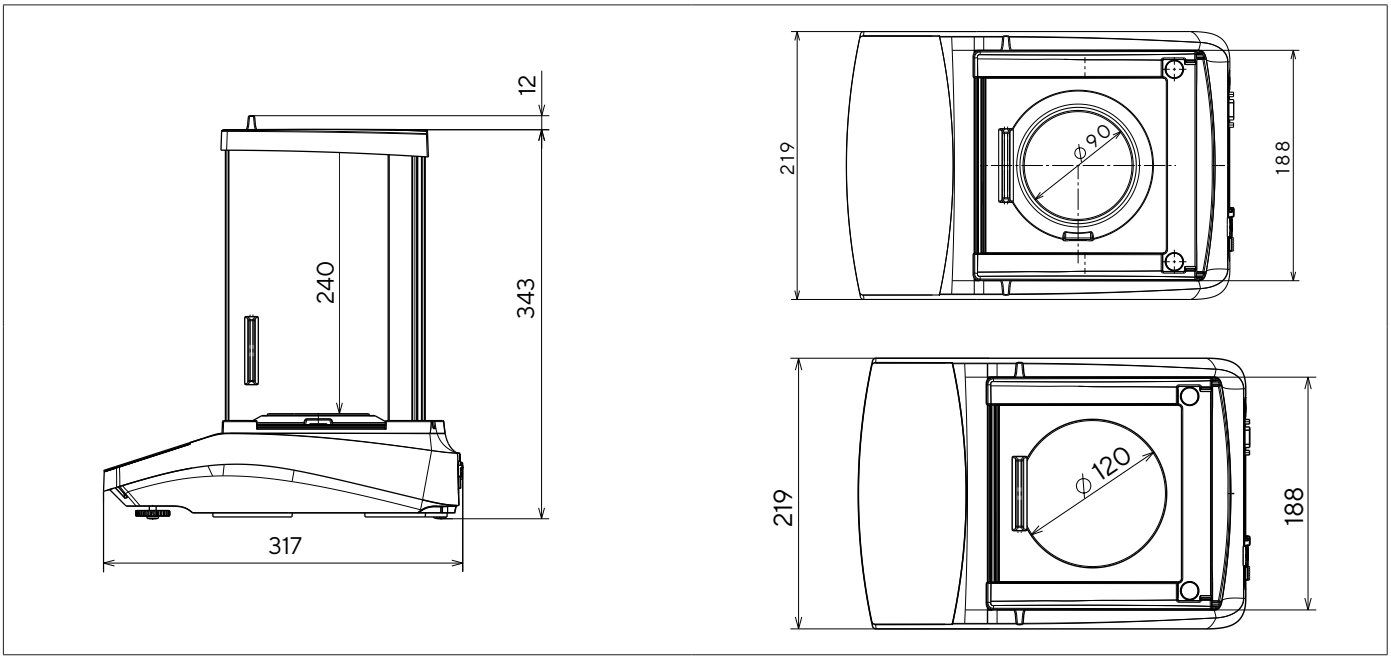

Fig. 6: Device dimensions of an analytical or precision balance with analytical draft shield in mm

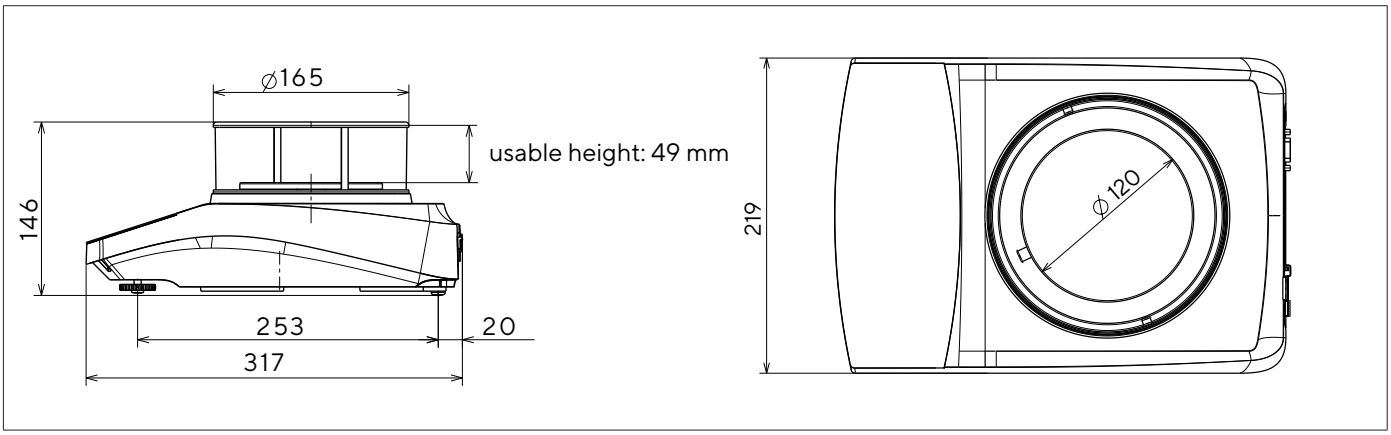

Fig. 7: Device dimensions of a precision balance with round draft shield in mm

15.10 Metrological Data

15.10.1 BCE224 | BCE124 | BCE64 | BCE653 | BCE623 | BCE423 | BCE323 | BCE223 models

Model		BCE224-1x BCE224I-1x	BCE124-1x BCE124I-1x	BCE64-1x BCE64I-1x	BCE653-1x BCE653I-1x	BCE623-1x BCE623I-1x	BCE423-1x BCE423I-1x	BCE323-1x BCE323I-1x	BCE223-1x BCE223I-1x
	Unit	**Value**	**Value**	**Value**	**Value**	**Value**	**Value**	**Value**	**Value**
Readability | Scale interval (d)	mg	0.1	0.1	0.1	1	1	1	1	1
Maximum capacity (Max)	g	220	120	60	650	620	420	320	220
Repeatability									
At 5% load, typical value	mg	0.08	0.08	0.08	0.5	0.5	0.5	0.5	0.5
At approx. maximum load, typical value	mg	0.1	0.1	0.1	1	1	1	1	1
Linearity deviation									
Limits	± mg	0.2	0.2	0.2	2	2	2	2	2
Typical value	± mg	0.06	0.06	0.06	0.6	0.6	0.6	0.6	0.6
Sensitivity drift between +10 °C and +30 °C	± ppm/K	1.5	1.5	1.5	2	2	2	2	2
Tare maximum capacity (subtractive)		<100% of maximum capacity							
isoCAL (only for I-1x models):									
Temperature change	K	1.5	1.5	1.5	2	2	2	2	2
Time interval	h	4	4	4	6	6	6	6	6
For models with approval:									
Accuracy class		I	I	I	II	II	II	II	II
Type		BC-EB	BC-EB	BC-EB	BC-ED	BC-ED	BC-ED	BC-ED	BC-ED
Verification scale interval (e)	mg	1	1	1	10	10	10	10	10
Minimum load (Min)	mg	10	10	10	20	20	20	20	20
Minimum initial weighing according to USP (United States Pharmacopeia), Chap. 41									
Optimum minimum initial weighing	g	0.082	0.082	0.082	0.82	0.82	0.82	0.82	0.82
Typical measurement time	s	≤2.0	≤2.0	≤2.0	≤1.5	≤1.5	≤1.5	≤1.5	≤1.5
Typical stabilization time	s	≤1.5	≤1.5	≤1.5	≤1.0	≤1.0	≤1.0	≤1.0	≤1.0

Model		BCE224-1x BCE224I-1x	BCE124-1x BCE124I-1x	BCE64-1x BCE64I-1x	BCE653-1x BCE653I-1x	BCE623-1x BCE623I-1x	BCE423-1x BCE423I-1x	BCE323-1x BCE323I-1x	BCE223-1x BCE223I-1x
	Unit	**Value**	**Value**	**Value**	**Value**	**Value**	**Value**	**Value**	**Value**
Recommended calibration weight									
External calibrated test weight	g	200	100	50	500	500	200	200	200
Accuracy class in accordance with OIML R111-1		E2	E2	E2	F1	F1	F1	F1	F1
Weighing pan size	mm	Ø 90	Ø 90	Ø 90	Ø 120	Ø 120	Ø 120	Ø 120	Ø 120
Weighing chamber height (upper edge of the weighing pan to the lower edge of the upper draft shield panel)	mm	240	240	240	50	240	240	240	240
Net weight, approx.	kg	5.9 | 6.2	5.9 | 6.2	5.9 | 6.2	4.5 | 4.8	5.9 | 6.3	5.9 | 6.3	5.9 | 6.3	5.9 | 6.3

16 Accessories

16.1 Balance Accessories

These tables contain an excerpt of the accessories that can be ordered. For information on other products, contact Sartorius.

Item	Quantity	Order number
Display protection film (set of 5)	1	YDC10
Shield disk for balances with a readability of 0.1 mg	1	YSP02
Dust cover for balances with an analytical draft shield	1	6960BC01
Density determination set for solids and liquids for balances with a readability of 0.1 mg | 1 mg	1	YDK03
"Kensington Lock" anti-theft device	1	YKL01
Pedal button | foot switch	1	YFS03
Second display | remote display	1	YSD01
Below-balance weighing (not for models in legal metrology)		
Hook M5	1	69EA0039
Weighing table		
made from wood with natural stone	1	YWT09
made from natural stone, with vibration dampening	1	YWT03
Wall console made from natural stone	1	YWT04

16.2 Printer and Accessories for Data Communication

These tables contain an excerpt of the accessories that can be ordered. For information on other products, contact Sartorius.

Item	Quantity	Order number
Thermal printer (USB-B)	1	YDP40
Thermal transfer printer (USB-B, RS232)	1	YDP30
Dot matrix printer (RS232)	1	YDP20-0CE
Data cable USB-C > USB-B	1.5 m	YCC-USB-C-B
Data cable USB-C > USB-A	1.5 m	YCC-USB-C-A
Data cable RS232 (9-pin) > USB-A	1.5 m	YCC-D09M-USB-A
Data cable RS232 (9-pin) male > RS232 (9-pin) male	1.5 m	YCC-D09MM
Data cable RS232 (9-pin) male > RS232 (9-pin) female	1.5 m	YCC-D09MF
Y-adapter RS232 (9-pin) male > 2x RS232 (9-pin) female	1.5 m	YCC-D09M-2D09F

16.3 External Calibration and Adjustment Weights

These tables contain an excerpt of the accessories that can be ordered. For information on other products, contact Sartorius.

BCE model	Weight	Accuracy class	Order number
224	200 g	E2	YCW522-AC-02
124	100 g	E2	YCW512-AC-02
64	50 g	E2	YCW452-AC-02
653|623	500 g	F1	YCW553-AC-02
423|323|223	200 g	F1	YCW523-AC-02

17 Sartorius Service

Sartorius Service is available for queries regarding the device. For information about the service addresses, services provided, or to contact a local representative, please visit the Sartorius website (www.sartorius.com).

When contacting Sartorius Service with questions about the system or in the event of malfunctions, be sure to have the device information, e.g. serial number, hardware, firmware, and configuration, to hand. Consult the information on the manufacturer's ID label and in the "INFO" menu.

18 Conformity Documents

The attached documents declare the conformity of the device with the designated directives or standards.

M For verified balances, the conformity declaration supplied with the balance is valid for use in the EEA. Please retain this declaration.

Inhalt

1 Über diese Anleitung 53
1.1 Gültigkeit 53
1.2 Mitgeltende Dokumente 53
1.3 Zielgruppen 53
1.4 Darstellungsmittel 54
1.4.1 Warnhinweise in Handlungsbeschreibungen 54
1.4.2 Weitere Darstellungsmittel 54

2 Sicherheitshinweise 54
2.1 Bestimmungsgemäße Verwendung 54
2.2 Personalqualifikation 55
2.3 Bedeutung dieser Anleitung 55
2.4 Einwandfreiheit des Geräts 55
2.5 Symbole am Gerät 55
2.6 Elektrische Ausrüstung 55
2.6.1 Beschädigung der elektrischen Ausrüstung des Geräts 55
2.6.2 Arbeiten an der elektrischen Ausrüstung des Geräts 55
2.6.3 Netzgerät und Netzanschlusskabel 55
2.7 Verhalten im Notfall 56
2.8 Zubehör und Ersatzteile 56
2.9 Persönliche Schutzausrüstung 56
2.10 Glasbruch 56

3 Gerätebeschreibung 57
3.1 Geräteübersicht 57
3.2 Geräteanschlüsse 57
3.3 Waagschale und zugehörige Komponenten 58
3.4 Konformitätsbewertete Geräte 58
3.5 Symbole am Gerät 58

4 Bedienkonzept 59
4.1 Bedienanzeige im Wägebetrieb 59
4.2 Anzeige Menü-und Systemeinstellungen 59
4.2.1 Schaltflächen 60
4.3 Anzeigen in der Bedienanzeige 61
4.4 Menüstruktur 63
4.4.1 Menüstruktur „Hauptmenü“ 63
4.4.2 Menüstruktur „Einheitenwechsel“ 64
4.5 In Menüs navigieren 64

5 Installation 65
5.1 Lieferumfang 65
5.2 Aufstellort wählen 65
5.3 Auspacken 65
5.4 Waagschale und zugehörige Komponenten montieren 65
5.4.1 Gerät mit Analysenwindschutz montieren 65
5.4.2 Gerät mit runden Windschutz montieren 66
5.5 Gerät akklimatisieren 66

6 Inbetriebnahme 67
6.1 Netzgerät montieren 67
6.1.1 Netzgerät zusammensetzen 67
6.1.2 Netzsteckeradapter demontieren 67
6.2 Spannungsversorgung anschließen 67

7 Systemeinstellungen 68
7.1 Systemeinstellungen durchführen 68
7.2 Kalibrieren und Justieren einstellen 68
7.2.1 isoCAL-Funktion ein- oder ausstellen (nur Modelle I-1x) 68
7.2.2 Interne Kalibrierung und Justierung einstellen (nur Modelle I-1x) 68
7.2.3 Externe Kalibrierung und Justierung einstellen 68
7.3 Parameterliste 69
7.3.1 Menü „SETUP“/„WAAGE“ 69
7.3.2 Menü „SETUP“/„ALG.DNST“ 71
7.3.3 Menü „GERAET“/„RS232“ 71
7.3.4 Menü „GERAET“/„USB“ 72
7.3.5 Menü „GERAET“/„EXTRAS“ 73
7.3.6 Menü „DAT.AUSG“/„KOMM.SBI“ 74
7.3.7 Menü „DAT.AUSG“/„DRUCKPR.“ 74
7.3.8 Menü „DAT.AUSG“/„PC.DIREK.“ 75
7.3.9 Menü „ANWEND.“/„WIEGEN“ ... 75
7.3.10 Menü „ANWEND.“/„ZAEHLEN“ 76
7.3.11 Menü „ANWEND.“/„PROZENT“ 76
7.3.12 Menü „ANWEND.“/„NET.TOT.“ ... 76
7.3.13 Menü „ANWEND.“/„SUMME“ ... 76
7.3.14 Menü „ANWEND.“/„TIERWG“ ... 77
7.3.15 Menü „ANWEND.“/„VERRECH.“ 77
7.3.16 Menü „ANWEND.“/„DICHTE“ ... 78
7.3.17 Menü „ANWEND.“/„STATIST.“ ... 78
7.3.18 Menü „ANWEND.“/„MAX.WERT“ 78
7.3.19 Menü „ANWEND.“/„KONTRLL“ 78
7.3.20 Menü „INPUT“ 79
7.3.21 Menü „INFO“ 80
7.3.22 Menü „SPRACHE.“ 80